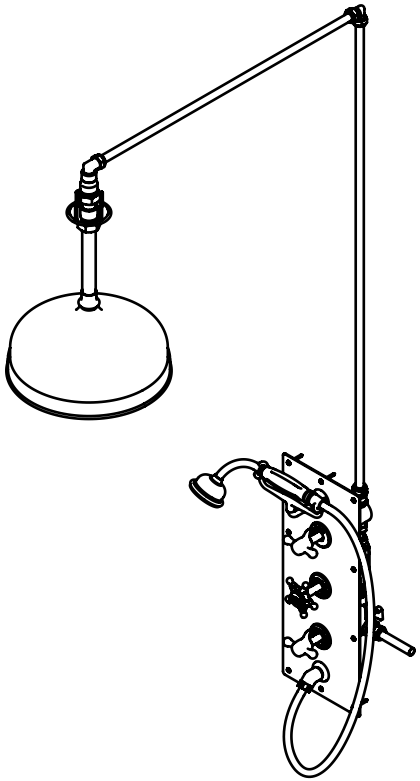

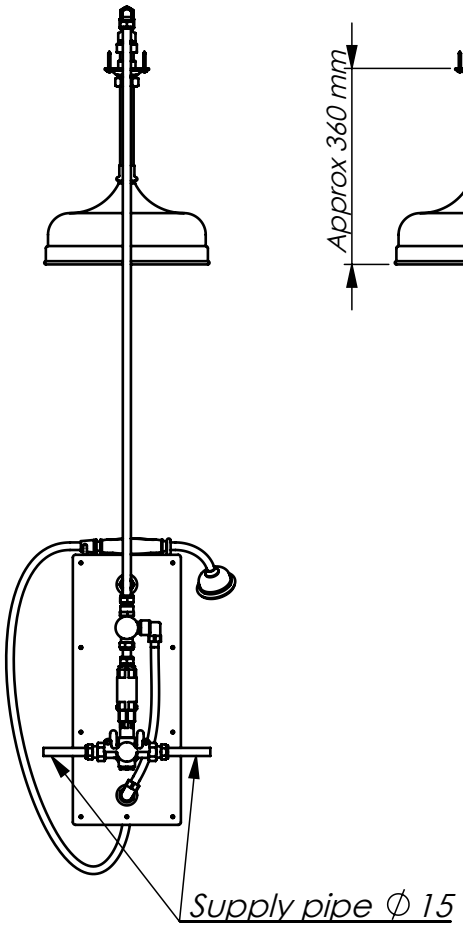

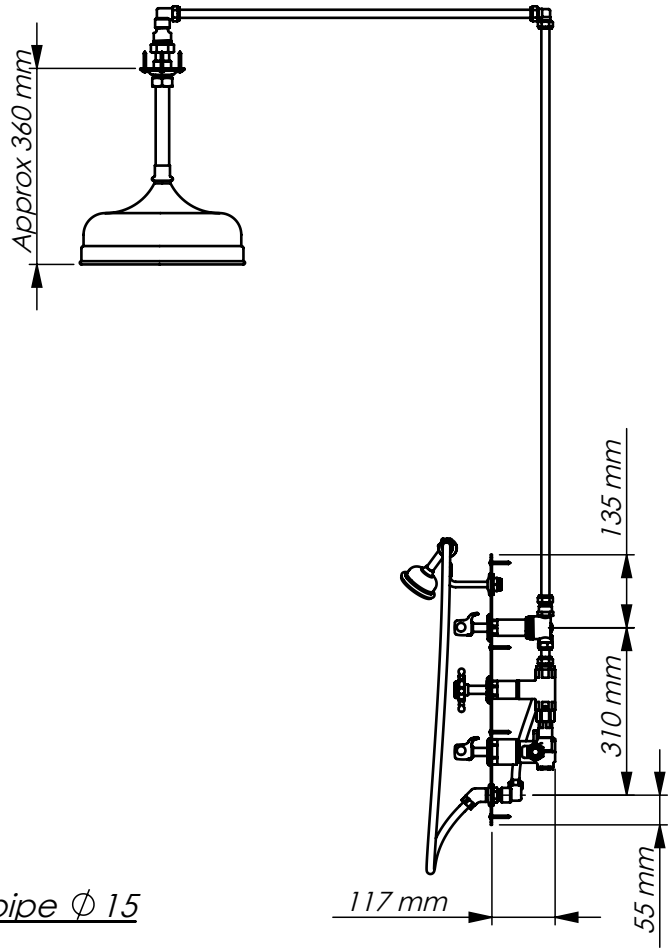

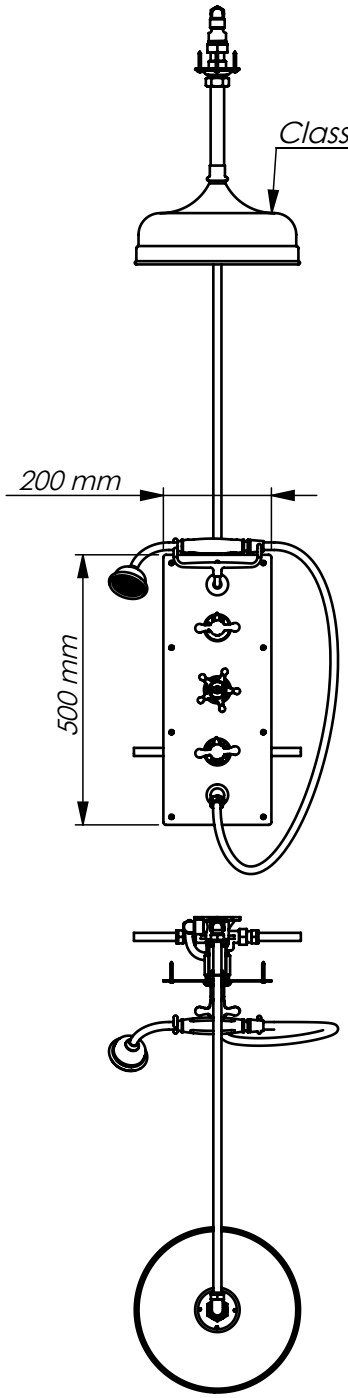

DRUMMONDS	DAD1911A	01	2011-09-29
	PRODUCT CODE	VERSION	DATE