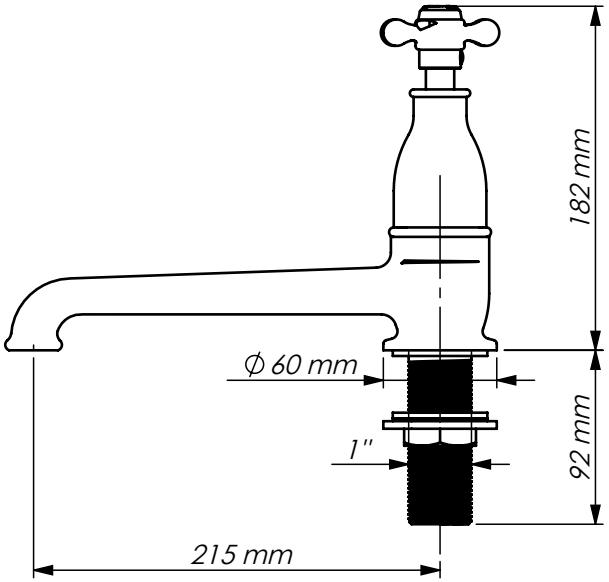

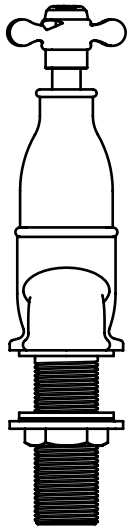

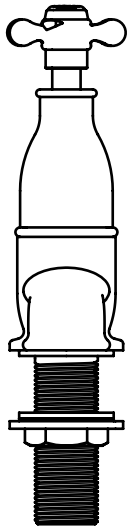

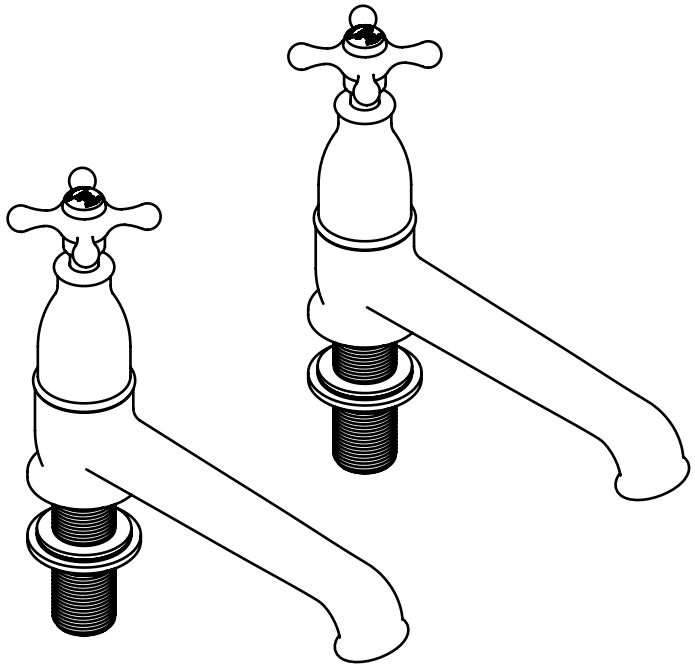

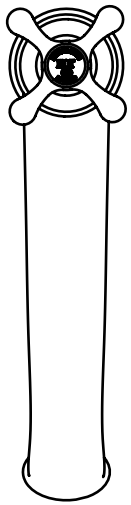

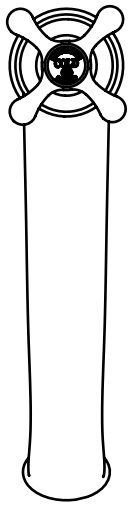

DRUMMONDS	DAD1600	01	06.04.2011
	PRODUCT CODE	VERSION	DATE